NOTES: UNLESS OTHERWISE SPECIFIED

1. INTERPRET DRAWING IAW ASME Y14.100, Y14.24, Y14.34M AND Y14.35M.
2. DIMENSIONS AND TOLERANCING SHALL BE INTERPRETED IAW ASME Y14.5M-1994.
3. MATERIAL:
   a. TYPE 316 STAINLESS STEEL TUBE, 0.035" THICK WALL, 1/4 " OD, ASTM A312 / A312M - 14.
   b. TYPE 316 STAINLESS STEEL SHEET, 0.030" THICK, MIL-S-5059.
4. REMOVE BURRS AND BREAK SHARP EDGES.
5. FINISH: PASSIVATION TREATMENT, ASTM A967 / A967M - 13.
6. IDENTIFY PER MIL-STD-130 BY MARKING .12 HIGH GOTHIC STYLE CHARACTERS USING BLACK LACQUER PER TT-L-32, TYPE II, CLASS 2 OR USING LABEL. LOCATION TOLERANCE ±.50.

REVISION HISTORY

| REV | DESCRIPTION | DATE | APPROVED |
|---|---|---|---|
| - | INITIAL RELEASE | 13/8/13 | TS |
| A | REVISED IAW ECN ASOS-ECN-000047 | 12/11/14 | TS |

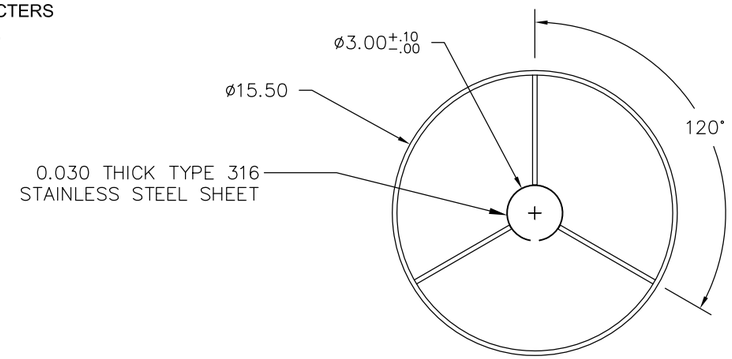


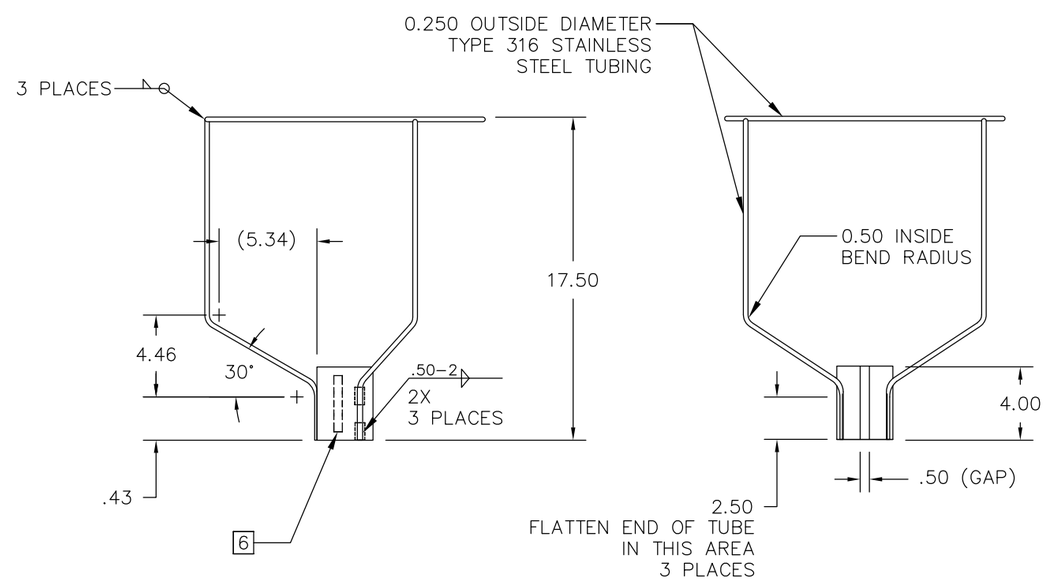


Configuration Management Approval
Released Drawings
National Weather Service
Configuration Management Office
approvals are electronic and captured on the CM website, located at:
https://ops13web.nws.noaa.gov/trldmsapp
Changes to this drawing must be documented and Approved per an Engineering Change Notice (ECN)
David Green 10/20/2014

| REV | REV | STATUS |
|---|---|---|
| - | REV | |
| 1 | SH | |

| NEXT ASSY | USED ON |
|---|---|
| S100-2A8MT3-MP40-10 | ASOS |

APPLICATION

UNLESS OTHERWISE SPECIFIED:
DIMENSIONS ARE IN INCHES
TOLERANCES, ANGLES, ±5°
3 PLACES DECIMALS ±.005
2 PLACES DECIMALS ±.20

1325 EAST WEST HIGHWAY
SILVER SPRING, MD. 20910

| | | |
|---|---|---|
| PREPARED | 10/20/14 | DLG |
| CHECKED | 10/20/14 | JS |
| DESIGN | 10/20/14 | PO |
| C.M. | 10/20/14 | KD |
| APPROVED | 10/20/14 | TS |
| DATE | 13/8/13 | |

U.S. DEPARTMENT OF COMMERCE
NATIONAL OCEANIC & ATMOSPHERIC ADMINISTRATION
NATIONAL WEATHER SERVICE

# WELDMENT, BIRD DETERRENT ASOS

| SIZE | CAGE CODE | DRAWING NO. |
|---|---|---|
| C | 82187 | S100-2A8MT3-MP40 |

SCALE: NTS | SHEET: 1OF 1 | FILE: S100-2A8MT3-MP40 | LAST UPDATE: 12/15/14, 11:24